Certificate#4810.01

In Situ Temperature Measurement Test Report

For

ASMART LIGHT CO., LTD

(Brand Name: ASMART)

506 N GARFIELD AVE SUITE#210 ALHAMBRA CA 91801

Outdoor Pole/Arm-Mounted Area and Roadway Luminaires

Architectural Flood and Spot Luminaires

Model name(s): AST-S-G12C-300WBT3SA1-abcdef

Remark: "a" can be any two letters to represent lamp colors. "b" represent photocontrol, which can be "3RP", "3NP", "5RP", "5NP", "7RP", "7NP" for Photocontrol type provided or blank for no Photocontrol provided. "c" represent surge protector, can be "10SP", "20SP" for Surge-Protective Device type provided or blank for no Surge-Protective Device provided. "d" can be "DM1","DP1", "DM", "DP" or blank for DC Motion Sensor, DC PIR Sensor provided or not. "e" represent bracket, can be "AM", "DM", "DM1", "YM", "A&DM" and "FM". "f" can be any digits to represent CCT.

Representative (Tested) Model:
AST-S-G12C-300WBT3SA1-abcde30

Model Different: All construction and rating are the same, except CCT

Test & Report By:

Winny Wu

Engineer: Winny Wu

Date: 2022-12-21

Update::2023-03-21

Review By:

Jason Luo

Manager: Jason Luo

Table of Contents

1 General 3
1.1 Product Information 3
1.2 Standards or methods 4
1.3 Equipment list 4
2 Test conducted and method 4
2.1 Ambient Condition 4
2.2 Temperature Stabilization 4
2.3 Thermocouples 4
2.4 Thermocouples contact 5
3 Test Results 6
3.1 Test Data: 6
3.2 Test Photo: 6
3.3 Test Data of LED Driver: 8
3.4 Test Photo of LED Driver: 8

1 General

1.1 Product Information

Brand Name	ASMART
Model Number	AST-S-G12C-300WBT3SA1-abcdef
Luminaire Type	Outdoor Pole/Arm-Mounted Area and Roadway Luminaires Architectural Flood and Spot Luminaires
Nominal Power	300W
Rated Initial Lamp Lumen	--
Declared CCT	3000K, 3500K, 4000K, 4500K, 5000K, 5700K, 6500K
LED Manufacturer	Lumileds Holding B.V.
LED Model	L128-XX80RC35003P1
LED Driver Manufacturer	SHENZHEN SOSEN ELECTRONICS CO.,LTD
LED Driver Model	SS-320NH-E260BH
Sample Receipt Date	2022-12-10
Sample Number	BLC2212018E3-F1
Photo	
	

1.2 Standards or methods

The following standards are partly or totally used or referenced for test:

No.	Name
ANSI/UL 1598:2008	**Luminaires**

1.3 Equipment list

Equipment ID	Equipment Name	Calibration Date
BL-009B	Power Meter	2021-10-09
BL003	Hybrid Recorder	2022-11-23

2 Test conducted and method

2.1 Ambient Condition

Test was conducted in an ambient temperature of 25±5℃. Ambient temperature variations above or below 25℃ was subtracted from or added to temperatures recorded at points on the luminaire.
The ambient temperature was measured by a thermocouple which was immersed in 15ml of mineral oil in a glass container.

2.2 Temperature Stabilization

Temperatures were measured after they have stabilized when the test has been running for a minimum of 7.5 hours, or the test has been running for a minimum of 3 hours and three successive reading taken at 15 minutes intervals are with 1℃ of another and are not rising.

2.3 Thermocouples

Type J thermocouple was used for temperature measurement. The thermocouple was 0.05mm2(30AWG), and complied with the requirements specified in ASTM MNL 12 and limits of error specified in NIST ITS 90 and ISA MC96.1.

2.4 Thermocouples contact

Thermocouples were in contact with the TMP LED location described in LM-80 test report. In order to gain the maximum temperature, if appropriate, more than one thermocouple were contact in these locations. For details information, please refer to clause 3.3 for the photo of thermocouple contact.

3 Test Results

Test date	2022-12-30	Test Ambient	25.1 ℃
Sample No.		LED Package Model	
BLC2212018E3-F1		L128-XX80RC35003P1	
LED driver of Each Lamp	Output voltage V	Measured LED working current (Max.) mA	
1	229	89.1	

3.1 Test Data:

Input Vol.	120.0V	Input Current	2.545A	Input Wattage	303.9W	Temperature stabilization time:	500 min

No.	Temperature (°C)		No.	Temperature (°C)		No.	Temperature (°C)	
	Measured	Corrected at 25°C		Measured	Corrected at 25°C		Measured	Corrected at 25°C
1	74.6	74.5	2	74.1	74.0	--	--	--
The highest in-situ measured temperature LED is 74.5°C								

3.2 Test Photo:

Ts Position:

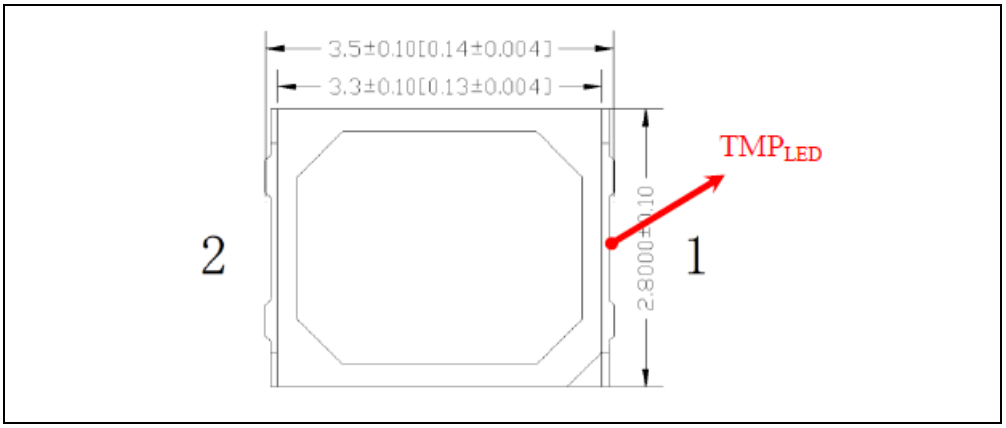

Thermocouple Location on Temperature Measurement Point (TMP):

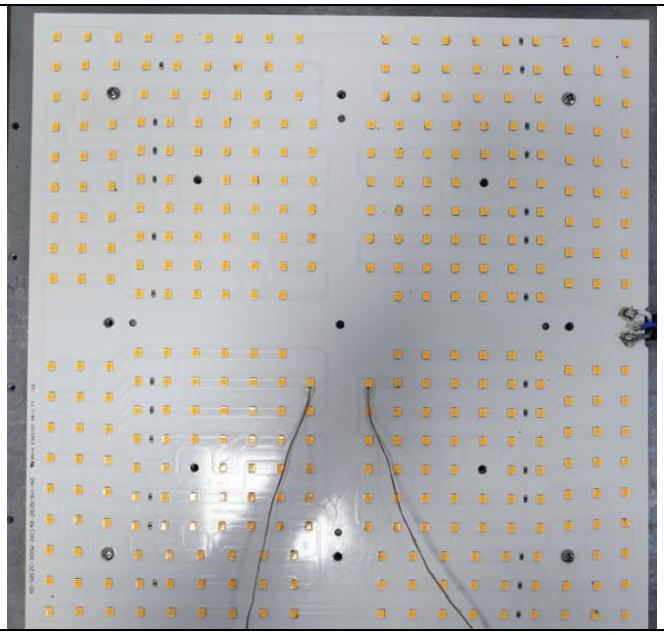



Results

Time (t) at which to estimate lumen maintenance (hours):	36,000
Lumen maintenance at time (t) (%):	91.60%
Reported L90 (hours):	43,000

3.3 Test Data of LED Driver:

Input Vol.	120.0V	Input Current	2.545A	Input Wattage	303.9W	Temperature stabilization time:	500 min

No	Measured TC Temperature (°C)		Temperature Limited of Life ⩾ 50000 hours
	Measured	Corrected at 25°C	
1	61.4	61.3	77

3.4 Test Photo of LED Driver:

Ts Position:

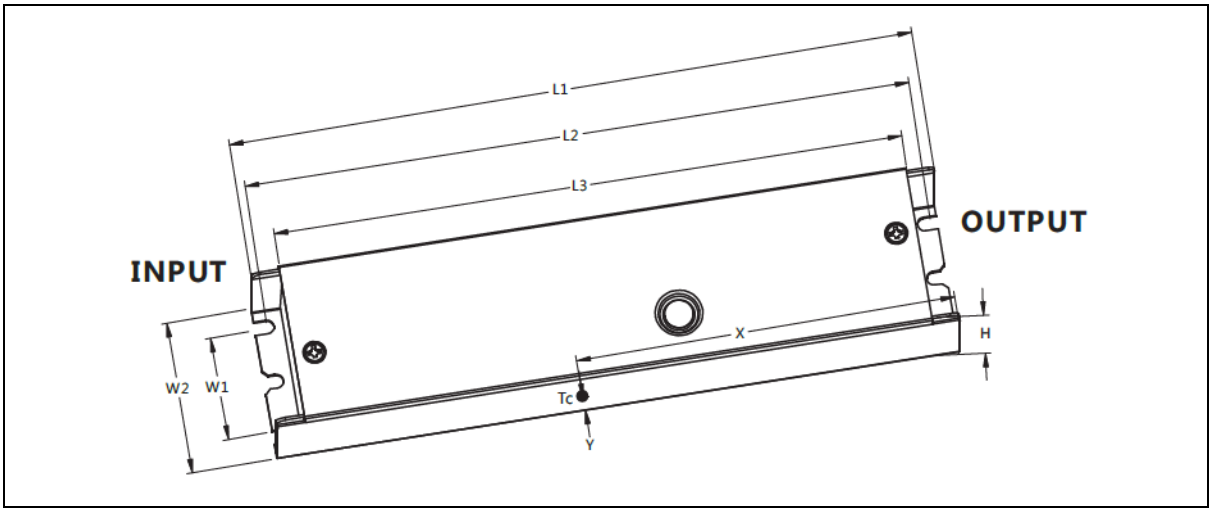

Thermocouple Location on Temperature Measurement Point (TMP):

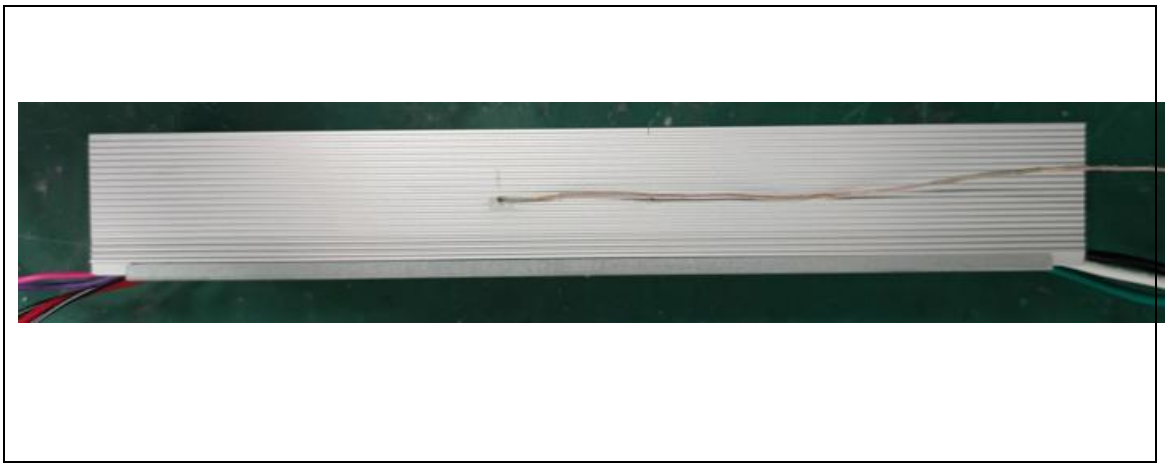

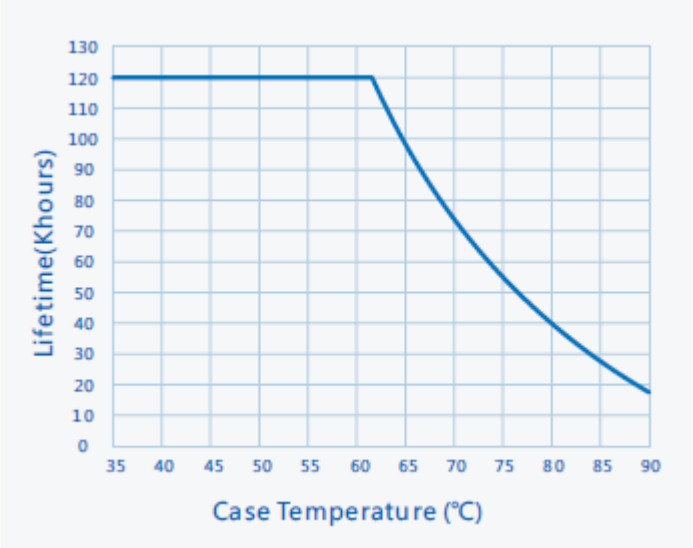

****** END OF THE TEST REPORT******